General technical data

Trapezoidal-thread spindle

		M 0	M 1	M 2	M 3	M 4	M 5	J 1	J 2	J 3	J 4	J 5
Maximum lifting force [kN][1]		2.5	5	10	25	50	100	150	200	250	350	500
Diameter and pitch [mm]		14 x 4	18 x 4	20 x 4	30 x 6	40 x 7	55 x 9	60 x 9	70 x 10	80 x 10	100 x 10	120 x 14
Stroke per revolution of the drive shaft [mm]	Transmission ratio. H[2]	1	1	1	1	1	1	1	1	1	1	1
	Transmission ratio. L[2]	0.25	0.25	0.25	0.25	0.25	0.25	0.25	0.25	0.25	0.25	0.25
Transmission ratio.	Transmission ratio. H[2]	4:1	4:1	4:1	6:1	7:1	9:1	9:1	10:1	10:1	10:1	14:1
	Transmission ratio. L[2]	16:1	16:1	16:1	24:1	28:1	36:1	36:1	40:1	40:1	40:1	56:1
Efficiency [%][3]	Transmission ratio. H[2]	35	31	29	29	26	24	23	22	20	19	19
	Transmission ratio. L[2]	27	25	23	23	21	19	18	17	15	15	15
Weight [kg] (without stroke)		0.6	1.2	2.1	6	17	32	41	57	57	85	160
Weight [kg per 100 mm stroke]		0.1	0.26	0.42	1.14	1.67	3.04	3.1	4.45	6.13	7.9	11.5
Idling torque [Nm]	H	0.02	0.04	0.11	0.15	0.35	0.84	0.88	1.28	1.32	1.62	1.98
	L	0.016	0.03	0.10	0.12	0.25	0.51	0.57	0.92	0.97	1.10	1.42
Housing material		G – AL up to M3				GGG – 40						

Ball screw spindle

		M 0	M 1	M 2	M 3	M 4		M 5	J 3
Maximum lifting force [kN][1]		2	5	10	12.5	22	42	65	78
Diameter and pitch [mm]		1205	1605	2005	2505	4005	4010	5010	8010
Stroke per revolution of the drive shaft [mm]	Transmission ratio. H[2]	1.25	1.25	1.25	0.83	0.71	1.43	1.1	1
	Transmission ratio. L[2]	0.31	0.31	0.31	0.21	0.18	0.36	0.28	0.25
Transmission ratio.	Transmission ratio. H[2]	4:1	4:1	4:1	6:1	7:1		9:1	10:1
	Transmission ratio. L[2]	16:1	16:1	16:1	24:1	28:1		36:1	40:1
Efficiency [%][3]	Transmission ratio. H[2]	60	57	56	55	53	56	47	45
	Transmission ratio. L[2]	48	46	44	43	43	45	37	34
Weight [kg] (without stroke)		0.6	1.3	2.3	7	19		35	63
Weight [kg per 100 mm stroke]		0.09	0.26	0.42	1.14	1.67		3.04	6.13
Idling torque [Nm]	H	0.02	0.04	0.11	0.15	0.35		0.84	1.32
	L	0.016	0.03	0.10	0.12	0.25		0.51	0.97
Housing material		G – AL up to M3				GGG – 40			

[1] Dependent on stroke speed, duty cycle, etc.
[2] H =high travel speed,
L = low travel speed
[3] The specified efficiency values are average values

تلفن : (021) 33913364 - 33951660
فکس : (021) 33985603

Dimensions, version R

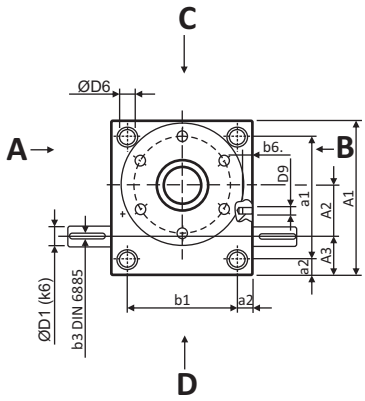

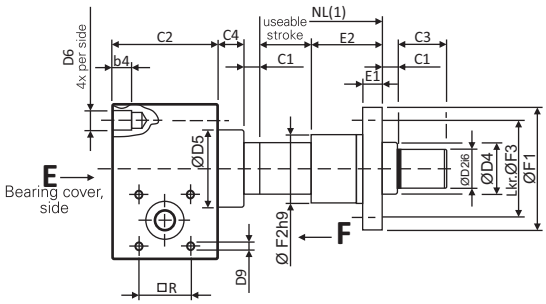

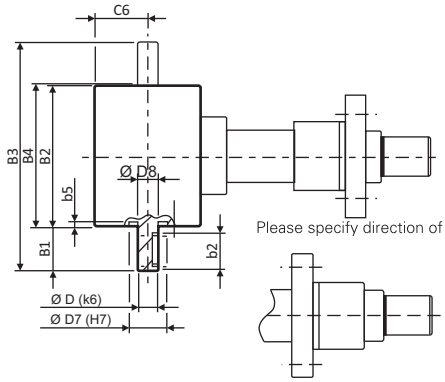

Size	Dimensions [mm]																		
	A_1	A_2	A_3	a_1	a_2	B_1	B_2	B_3	B_4	b_1	b_2	b_3	b_4	b_5	C_1	C_2	C_3	C_4	C_6
M 0	60	20	18	48	6	21	50	92	52	38	14	3	12	1.5	10	50	12	12	25
M 1	80	25	24	60	10	24	72	120	77	52	18	3	13	1.5	12	62	15	12	31
M 2	100	32	28	78	11	27.5	85	140	90	63	20	5	15	1.5	15	75	20	18	37.5
M 3	130	45	31	106	12	45	105	195	110	81	36	5	15	2	20	82	25	23	41
M 4	180	63	39	150	15	47.5	145	240	150	115	36	6	16	2	25	117	30	32	58.5
M 5	200	71	46	166	17	67.5	165	300	170	131	56	8	30	2.5	25	160	45	40	80
J 1	210	71	49	170	20	65	195	325	200	155	56	8	40	8	25	175	55	40	87.5
J 2	240	80	60	190	25	67.5	220	355	225	170	56	8	45	8	25	165	70	40	82.5
J 3	240	80	60	190	25	67.5	220	355	225	170	56	8	45	8	25	165	75	40	82.5
J 4	290	100	65	230	30	65	250	380	255	190	56	10	54	8	25	220	100	50	110
J 5	360	135	75	290	35	100	300	500	305	230	90	14	80	8	30	266	120	60	133

Size	Dimensions [mm]															
	D_{1k6}	D_{2j6}	D_4TR	D_4KGT	D_5	D_6	D_7^{H7}	D_8	D_9 x b_6	❑ R	E_1	E_2	F_1	F_2	F_3	F_4
M 0	9 x 20	8	Tr14 x 4	1205	26	M6	22	10	M5 x 6*	24	12	35	48	28	38	6
M 1	10 x 21.5	12	Tr18 x 4	1605	30	M8	32	12	(M5 x 6)*	32	12/12	44/44	48/48	28/28	38/38	6/6
M 2	14 x 25	15	Tr20 x 4	2005	36.1	M8	32	15	M6 x 10	35	12/12	44/44	55/55	32/32	45/45	7/7
M 3	16 x 42.5	20	Tr30 x 6	2505	46	M10	40	17	M8 x 10	44	14/14	46/46	62/62	38/38	50/50	7/7
M 4	20 x 45	25	Tr40 x 7	4005/4010	60	M12	52	25	M10 x 14	55	16/16	73/59	95/80	63/53	78/68	9/7
M 5	25 x 65	40	Tr55 x 9	5010	85	M20	62	28	M12 x 16	70	18/18	97/97	110/110	72/72	90/90	11/11
J 1	25 x 62.5	45	Tr60 x 9	–	90	M24	72	28	M12 x 16	70	20	99	125	85	105	11
J 2	30 x 65	55	Tr70 x 10	–	105.2	M30	80	32	M12 x 18	(80)	30	100	180	95	140	17
J 3 (M 6)	30 x 65	60	Tr80 x 10	8010	120	M30	80	32	M12 x 18	(80)	30/22	110/101	190/145	105/105	150/125	17/14
J 4 (M 7)	35 x 62.5	80	Tr100 x 10	–	145	M36	85	40	M16 x 30	(80)	35	130	240	130	185	25
J 5 (M 8)	48 x 97.5	95	Tr120 x 14	–	170	M42	90	50	M16 x 40	(115)	40	160	300	160	230	28

* Tapped bore for motor adaptor flange on attachment side A and B standard only centralised. Tapped bore on enquiry.
Note: subject to technical changes.
(1) NL: usable stroke length

بلبرینگ اسکوئی

(اسکو صنعت تاوریژ)

OBC
Oskoyi Ballbearing Company

Duty cycle 10-20%

Duty cycle < 10%

only static permissible

Performance table
for worm gear screw jacks M/J

M0-TR 14x4

n [rpm]	Stroke speed [m/min]		F=2.5 [kN]				F=2 [kN]				F=1.5 [kN]				F=1 [kN]				F=0.75 [kN]				F=0.5 [kN]				F=0.25 [kN]			
			4:1		16:1		4:1		16:1		4:1		16:1		4:1		16:1		4:1		16:1		4:1		16:1		4:1		16:1	
	H	L	Nm	kW	Nm	kW	Nm	kW	Nm	kW	Nm	kW	Nm	kW	Nm	kW	Nm	kW	Nm	kW	Nm	kW	Nm	kW	Nm	kW	Nm	kW	Nm	kW
1500	1.5	0.375	1.2	0.18	0.4	0.1	0.9	0.15	0.3	0.1	0.7	0.1	0.2	0.1	0.5	0.1	0.2	0.1	0.4	0.1	0.1	0.1	0.2	0.1	0.1	0.1	0.1	0.1	0	0.1
1000	1	0.25	1.2	0.12	0.4	0.1	0.9	0.1	0.3	0.1	0.7	0.1	0.2	0.1	0.5	0.1	0.2	0.1	0.4	0.1	0.1	0.1	0.2	0.1	0.1	0.1	0.1	0.1	0	0.1
750	0.75	0.188	1.2	0.1	0.4	0.1	0.9	0.1	0.3	0.1	0.7	0.1	0.2	0.1	0.5	0.1	0.2	0.1	0.4	0.1	0.1	0.1	0.2	0.1	0.1	0.1	0.1	0.1	0	0.1
600	0.6	0.15	1.2	0.1	0.4	0.1	0.9	0.1	0.3	0.1	0.7	0.1	0.2	0.1	0.5	0.1	0.2	0.1	0.4	0.1	0.1	0.1	0.2	0.1	0.1	0.1	0.1	0.1	0	0.1
500	0.5	0.125	1.2	0.1	0.4	0.1	0.9	0.1	0.3	0.1	0.7	0.1	0.2	0.1	0.5	0.1	0.2	0.1	0.4	0.1	0.1	0.1	0.2	0.1	0.1	0.1	0.1	0.1	0	0.1
300	0.3	0.075	1.2	0.1	0.4	0.1	0.9	0.1	0.3	0.1	0.7	0.1	0.2	0.1	0.5	0.1	0.2	0.1	0.4	0.1	0.1	0.1	0.2	0.1	0.1	0.1	0.1	0.1	0	0.1
100	0.1	0.025	1.2	0.1	0.4	0.1	0.9	0.1	0.3	0.1	0.7	0.1	0.2	0.1	0.5	0.1	0.2	0.1	0.4	0.1	0.1	0.1	0.2	0.1	0.1	0.1	0.1	0.1	0	0.1
50	0.05	0.013	1.2	0.1	0.4	0.1	0.9	0.1	0.3	0.1	0.7	0.1	0.2	0.1	0.5	0.1	0.2	0.1	0.4	0.1	0.1	0.1	0.2	0.1	0.1	0.1	0.1	0.1	0	0.1

M1-TR 18x4

n [rpm]	Stroke speed [m/min]		F=5 [kN]				F=4 [kN]				F=3 [kN]				F=2.5 [kN]				F=2 [kN]				F=1.5 [kN]				F=1 [kN]			
			4:1		16:1		4:1		16:1		4:1		16:1		4:1		16:1		4:1		16:1		4:1		16:1		4:1		16:1	
	H	L	Nm	kW	Nm	kW	Nm	kW	Nm	kW	Nm	kW	Nm	kW	Nm	kW	Nm	kW	Nm	kW	Nm	kW	Nm	kW	Nm	kW	Nm	kW	Nm	kW
1500	1.5	0.375	2.7	0.42	0.9	0.1	2.1	0.33	0.7	0.1	1.6	0.25	0.5	0.1	1.3	0.21	0.4	0.1	1.1	0.2	0.3	0.1	0.8	0.1	0.3	0.1	0.5	0.1	0.2	0.1
1000	1	0.25	2.7	0.28	0.9	0.1	2.1	0.22	0.7	0.1	1.6	0.17	0.5	0.1	1.3	0.14	0.4	0.1	1.1	0.1	0.3	0.1	0.8	0.1	0.3	0.1	0.5	0.1	0.2	0.1
750	0.75	0.188	2.7	0.21	0.9	0.1	2.1	0.17	0.7	0.1	1.6	0.13	0.5	0.1	1.3	0.1	0.4	0.1	1.1	0.1	0.3	0.1	0.8	0.1	0.3	0.1	0.5	0.1	0.2	0.1
600	0.6	0.15	2.7	0.17	0.9	0.1	2.1	0.13	0.7	0.1	1.6	0.1	0.5	0.1	1.3	0.1	0.4	0.1	1.1	0.1	0.3	0.1	0.8	0.1	0.3	0.1	0.5	0.1	0.2	0.1
500	0.5	0.125	2.7	0.14	0.9	0.1	2.1	0.1	0.7	0.1	1.6	0.1	0.5	0.1	1.3	0.1	0.4	0.1	1.1	0.1	0.3	0.1	0.8	0.1	0.3	0.1	0.5	0.1	0.2	0.1
300	0.3	0.075	2.7	0.1	0.9	0.1	2.1	0.1	0.7	0.1	1.6	0.1	0.5	0.1	1.3	0.1	0.4	0.1	1.1	0.1	0.3	0.1	0.8	0.1	0.3	0.1	0.5	0.1	0.2	0.1
100	0.1	0.025	2.7	0.1	0.9	0.1	2.1	0.1	0.7	0.1	1.6	0.1	0.5	0.1	1.3	0.1	0.4	0.1	1.1	0.1	0.3	0.1	0.8	0.1	0.3	0.1	0.5	0.1	0.2	0.1
50	0.05	0.013	2.7	0.1	0.9	0.1	2.1	0.1	0.7	0.1	1.6	0.1	0.5	0.1	1.3	0.1	0.4	0.1	1.1	0.1	0.3	0.1	0.8	0.1	0.3	0.1	0.5	0.1	0.2	0.1

M2-TR 20x4

n [rpm]	Stroke speed [m/min]		F=10 [kN]				F=8 [kN]				F=6 [kN]				F=4 [kN]				F=3 [kN]				F=2 [kN]				F=1 [kN]			
			4:1		16:1		4:1		16:1		4:1		16:1		4:1		16:1		4:1		16:1		4:1		16:1		4:1		16:1	
	H	L	Nm	kW	Nm	kW	Nm	kW	Nm	kW	Nm	kW	Nm	kW	Nm	kW	Nm	kW	Nm	kW	Nm	kW	Nm	kW	Nm	kW	Nm	kW	Nm	kW
1500	1.5	0.375	5.7	0.89	1.9	0.3	4.5	0.71	1.5	0.24	3.4	0.54	1.1	0.18	2.3	0.36	0.8	0.1	1.7	0.27	0.6	0.1	1.1	0.2	0.4	0.1	0.6	0.1	0.2	0.1
1000	1	0.25	5.7	0.6	1.9	0.2	4.5	0.48	1.5	0.16	3.4	0.36	1.1	0.12	2.3	0.24	0.8	0.1	1.7	0.18	0.6	0.1	1.1	0.1	0.4	0.1	0.6	0.1	0.2	0.1
750	0.75	0.188	5.7	0.45	1.9	0.15	4.5	0.36	1.5	0.12	3.4	0.27	1.1	0.1	2.3	0.18	0.8	0.1	1.7	0.13	0.6	0.1	1.1	0.1	0.4	0.1	0.6	0.1	0.2	0.1
600	0.6	0.15	5.7	0.36	1.9	0.12	4.5	0.29	1.5	0.1	3.4	0.21	1.1	0.1	2.3	0.14	0.8	0.1	1.7	0.1	0.6	0.1	1.1	0.1	0.4	0.1	0.6	0.1	0.2	0.1
500	0.5	0.125	5.7	0.3	1.9	0.1	4.5	0.24	1.5	0.1	3.4	0.18	1.1	0.1	2.3	0.12	0.8	0.1	1.7	0.1	0.6	0.1	1.1	0.1	0.4	0.1	0.6	0.1	0.2	0.1
300	0.3	0.075	5.7	0.18	1.9	0.1	4.5	0.14	1.5	0.1	3.4	0.11	1.1	0.1	2.3	0.1	0.8	0.1	1.7	0.1	0.6	0.1	1.1	0.1	0.4	0.1	0.6	0.1	0.2	0.1
100	0.1	0.025	5.7	0.1	1.9	0.1	4.5	0.1	1.5	0.1	3.4	0.1	1.1	0.1	2.3	0.1	0.8	0.1	1.7	0.1	0.6	0.1	1.1	0.1	0.4	0.1	0.6	0.1	0.2	0.1
50	0.05	0.013	5.7	0.1	1.9	0.1	4.5	0.1	1.5	0.1	3.4	0.1	1.1	0.1	2.3	0.1	0.8	0.1	1.7	0.1	0.6	0.1	1.1	0.1	0.4	0.1	0.6	0.1	0.2	0.1

M3-Tr 30x6

n [rpm]	Stroke speed [m/min]		F=25 [kN]				F=20 [kN]				F=15 [kN]				F=10 [kN]				F=5 [kN]				F=2.5 [kN]				F=1 [kN]			
			6:1		24:1		6:1		24:1		6:1		24:1		6:1		24:1		6:1		24:1		6:1		24:1		6:1		24:1	
	H	L	Nm	kW	Nm	kW	Nm	kW	Nm	kW	Nm	kW	Nm	kW	Nm	kW	Nm	kW	Nm	kW	Nm	kW	Nm	kW	Nm	kW	Nm	kW	Nm	kW
1500	1.5	0.375	14.7	2.31	5.2	0.82	11.8	1.85	4.2	0.66	8.8	1.39	3.1	0.49	5.9	0.93	2.1	0.33	2.9	0.46	1	0.2	1.5	0.2	0.5	0.1	0.6	0.1	0.2	0.1
1000	1	0.25	14.7	1.54	5.2	0.55	11.8	1.23	4.2	0.44	8.8	0.93	3.1	0.33	5.9	0.62	2.1	0.22	2.9	0.31	1	0.1	1.5	0.2	0.5	0.1	0.6	0.1	0.2	0.1
750	0.75	0.188	14.7	1.16	5.2	0.41	11.8	0.93	4.2	0.33	8.8	0.69	3.1	0.25	5.9	0.46	2.1	0.16	2.9	0.23	1	0.1	1.5	0.1	0.5	0.1	0.6	0.1	0.2	0.1
600	0.6	0.15	14.7	0.93	5.2	0.33	11.8	0.74	4.2	0.26	8.8	0.56	3.1	0.2	5.9	0.37	2.1	0.13	2.9	0.19	1	0.1	1.5	0.1	0.5	0.1	0.6	0.1	0.2	0.1
500	0.5	0.125	14.7	0.77	5.2	0.27	11.8	0.62	4.2	0.22	8.8	0.46	3.1	0.16	5.9	0.31	2.1	0.11	2.9	0.15	1	0.1	1.5	0.1	0.5	0.1	0.6	0.1	0.2	0.1
300	0.3	0.075	14.7	0.46	5.2	0.16	11.8	0.37	4.2	0.13	8.8	0.28	3.1	0.1	5.9	0.19	2.1	0.1	2.9	0.1	1	0.1	1.5	0.1	0.5	0.1	0.6	0.1	0.2	0.1
100	0.1	0.025	14.7	0.15	5.2	0.1	11.8	0.12	4.2	0.1	8.8	0.1	3.1	0.1	5.9	0.1	2.1	0.1	2.9	0.1	1	0.1	1.5	0.1	0.5	0.1	0.6	0.1	0.2	0.1
50	0.05	0.013	14.7	0.1	5.2	0.1	11.8	0.1	4.2	0.1	8.8	0.1	3.1	0.1	5.9	0.1	2.1	0.1	2.9	0.1	1	0.1	1.5	0.1	0.5	0.1	0.6	0.1	0.2	0.1

Note: values are valid at an ambient temperature of 20 °C

تلفن : (021) 33913364 - 33951660

فکس : (021) 33985603

OBC
Oskoyi Ballbearing Company

Oskoyi Ballbearing

Duty cycle 10-20%
Duty cycle < 10%
only static permissible

Performance table
for worm gear screw jacks M/J

M4-TR 40x7

n [rpm]	Stroke speed [m/min]		F=50 [kN]				F=40 [kN]				F=30 [kN]				F=20 [kN]				F=10 [kN]				F=5 [kN]				F=2.5 [kN]			
			7:1		28:1		7:1		28:1		7:1		28:1		7:1		28:1		7:1		28:1		7:1		28:1		7:1		28:1	
	H	L	Nm	kW	Nm	kW	Nm	kW	Nm	kW	Nm	kW	Nm	kW	Nm	kW	Nm	kW	Nm	kW	Nm	kW	Nm	kW	Nm	kW	Nm	kW	Nm	kW
1500	1.5	0.375	31.8	5	11.1	1.7	25.5	4	8.8	1.4	19.1	3	6.6	1	12.7	2	4.4	0.7	6.4	1	2.2	0.3	3.2	0.5	1.1	0.2	1.6	0.3	0.6	0.1
1000	1	0.25	31.8	3.3	11.1	1.2	25.5	2.7	8.8	0.9	19.1	2	6.6	0.7	12.7	1.3	4.4	0.5	6.4	0.7	2.2	0.2	3.2	0.3	1.1	0.1	1.6	0.2	0.6	0.1
750	0.75	0.188	31.8	2.5	11.1	0.9	25.5	2	8.8	0.7	19.1	1.5	6.6	0.5	12.7	1	4.4	0.35	6.4	0.5	2.2	0.2	3.2	0.3	1.1	0.1	1.6	0.1	0.6	0.1
600	0.6	0.15	31.8	2	11.1	0.7	25.5	1.6	8.8	0.6	19.1	1.2	6.6	0.4	12.7	0.8	4.4	0.3	6.4	0.4	2.2	0.1	3.2	0.2	1.1	0.1	1.6	0.1	0.6	0.1
500	0.5	0.125	31.8	1.7	11.1	0.6	25.5	1.3	8.8	0.5	19.1	1	6.6	0.3	12.7	0.7	4.4	0.2	6.4	0.3	2.2	0.1	3.2	0.2	1.1	0.1	1.6	0.1	0.6	0.1
300	0.3	0.075	31.8	1	11.1	0.3	25.5	0.8	8.8	0.3	19.1	0.6	6.6	0.2	12.7	0.4	4.4	0.1	6.4	0.2	2.2	0.1	3.2	0.1	1.1	0.1	1.6	0.1	0.6	0.1
100	0.1	0.025	31.8	0.3	11.1	0.1	25.5	0.3	8.8	0.1	19.1	0.2	6.6	0.1	12.7	0.1	4.4	0.1	6.4	0.1	2.2	0.1	3.2	0.1	1.1	0.1	1.6	0.1	0.6	0.1
50	0.05	0.013	31.8	0.2	11.1	0.1	25.5	0.1	8.8	0.1	19.1	0.1	6.6	0.1	12.7	0.1	4.4	0.1	6.4	0.1	2.2	0.1	3.2	0.1	1.1	0.1	1.6	0.1	0.6	0.1

M5-TR 55x9

n [rpm]	Stroke speed [m/min]		F=100 [kN]				F=80 [kN]				F=60 [kN]				F=40 [kN]				F=20 [kN]				F=10 [kN]				F=50 [kN]			
			9:1		36:1		9:1		36:1		9:1		36:1		9:1		36:1		9:1		36:1		9:1		36:1		9:1		36:1	
	H	L	Nm	kW	Nm	kW	Nm	kW	Nm	kW	Nm	kW	Nm	kW	Nm	kW	Nm	kW	Nm	kW	Nm	kW	Nm	kW	Nm	kW	Nm	kW	Nm	kW
1500	1.5	0.375	67.2	10.5	21.5	3.4	53.9	8.5	17.3	2.7	40.6	6.4	13.1	2.1	27.4	4.3	8.9	1.4	14.1	2.2	4.7	0.7	7.5	1.2	2.6	0.4	4.2	0.7	1.6	0.2
1000	1	0.25	67.2	7.0	21.5	2.2	53.9	5.6	17.3	1.8	40.6	4.3	13.1	1.4	27.4	2.9	8.9	0.9	14.1	1.5	4.7	0.5	7.5	0.8	2.6	0.3	4.2	0.4	1.6	0.2
750	0.75	0.188	67.2	5.3	21.5	1.7	53.9	4.2	17.3	1.4	40.6	3.2	13.1	1.0	27.4	2.1	8.9	0.7	14.1	1.1	4.7	0.4	7.5	0.6	2.6	0.2	4.2	0.3	1.6	0.1
600	0.6	0.15	67.2	4.2	21.5	1.3	53.9	3.4	17.3	1.1	40.6	2.6	13.1	0.8	27.4	1.7	8.9	0.6	14.1	0.9	4.7	0.3	7.5	0.5	2.6	0.2	4.2	0.3	1.6	0.1
500	0.5	0.125	67.2	3.5	21.5	1.1	53.9	2.8	17.3	0.9	40.6	2.1	13.1	0.7	27.4	1.4	8.9	0.5	14.1	0.7	4.7	0.2	7.5	0.4	2.6	0.1	4.2	0.2	1.6	0.1
300	0.3	0.075	67.2	2.1	21.5	0.7	53.9	1.7	17.3	0.5	40.6	1.3	13.1	0.4	27.4	0.9	8.9	0.3	14.1	0.4	4.7	0.1	7.5	0.2	2.6	0.1	4.2	0.1	1.6	0.1
100	0.1	0.025	67.2	0.7	21.5	0.2	53.9	0.6	17.3	0.2	40.6	0.4	13.1	0.1	27.4	0.3	8.9	0.1	14.1	0.1	4.7	0.1	7.5	0.1	2.6	0.1	4.2	0.1	1.6	0.1
50	0.05	0.013	67.2	0.4	21.5	0.1	53.9	0.3	17.3	0.1	40.6	0.2	13.1	0.1	27.4	0.1	8.9	0.1	14.1	0.1	4.7	0.1	7.5	0.1	2.6	0.1	4.2	0.1	1.6	0.1

J1-TR 60x9

n [rpm]	Stroke speed [m/min]		F=150 [kN]				F=100 [kN]				F=80 [kN]				F=60 [kN]				F=40 [kN]				F=20 [kN]				F=10 [kN]			
			9:1		36:1		9:1		36:1		9:1		36:1		9:1		36:1		9:1		36:1		9:1		36:1		9:1		36:1	
	H	L	Nm	kW	Nm	kW	Nm	kW	Nm	kW	Nm	kW	Nm	kW	Nm	kW	Nm	kW	Nm	kW	Nm	kW	Nm	kW	Nm	kW	Nm	kW	Nm	kW
1500	1.5	0.375	125.7	19.7	42.6	6.7	83.8	13.2	28.4	4.5	67	10.5	22.7	3.6	50.3	7.9	17.1	2.7	33.5	5.3	11.4	1.8	16.8	2.6	5.7	0.9	8.4	1.3	2.8	0.4
1000	1	0.25	125.7	13.2	42.6	4.5	83.8	8.8	28.4	3	67	7	22.7	2.4	50.3	5.3	17.1	1.8	33.5	3.5	11.4	1.2	16.8	1.8	5.7	0.6	8.4	0.9	2.8	0.3
750	0.75	0.188	125.7	9.9	42.6	3.3	83.8	6.6	28.4	2.2	67	5.3	22.7	1.8	50.3	3.9	17.1	1.3	33.5	2.6	11.4	0.9	16.8	1.3	5.7	0.4	8.4	0.7	2.8	0.2
600	0.6	0.15	125.7	7.9	42.6	2.7	83.8	5.3	28.4	1.8	67	4.2	22.7	1.4	50.3	3.2	17.1	1.1	33.5	2.1	11.4	0.7	16.8	1.1	5.7	0.4	8.4	0.5	2.8	0.2
500	0.5	0.125	125.7	6.6	42.6	2.2	83.8	4.4	28.4	1.5	67	3.5	22.7	1.2	50.3	2.6	17.1	0.9	33.5	1.8	11.4	0.6	16.8	0.9	5.7	0.3	8.4	0.4	2.8	0.1
300	0.3	0.075	125.7	3.9	42.6	1.3	83.8	2.6	28.4	0.9	67	2.1	22.7	0.7	50.3	1.6	17.1	0.5	33.5	1.1	11.4	0.4	16.8	0.5	5.7	0.2	8.4	0.3	2.8	0.1
100	0.1	0.025	125.7	1.3	42.6	0.4	83.8	0.9	28.4	0.3	67	0.7	22.7	0.2	50.3	0.5	17.1	0.2	33.5	0.4	11.4	0.1	16.8	0.2	5.7	0.1	8.4	0.1	2.8	0.1
50	0.05	0.013	125.7	0.7	42.6	0.2	83.8	0.4	28.4	0.1	67	0.4	22.7	0.1	50.3	0.3	17.1	0.1	33.5	0.2	11.4	0.1	16.8	0.1	5.7	0.1	8.4	0.1	2.8	0.1

J2-TR 70x10

n [rpm]	Stroke speed [m/min]		F=200 [kN]				F=150 [kN]				F=100 [kN]				F=80 [kN]				F=60 [kN]				F=40 [kN]				F=20 [kN]			
			10:1		40:1		10:1		40:1		10:1		40:1		10:1		40:1		10:1		40:1		10:1		40:1		10:1		40:1	
	H	L	Nm	kW	Nm	kW	Nm	kW	Nm	kW	Nm	kW	Nm	kW	Nm	kW	Nm	kW	Nm	kW	Nm	kW	Nm	kW	Nm	kW	Nm	kW	Nm	kW
1500	1.5	0.375	146.0	22.9	47.7	7.5	109.8	17.2	36.0	5.7	73.6	11.6	24.3	3.8	59.2	9.3	19.6	3.1	44.7	7.0	15.0	2.4	30.2	4.7	10.3	1.6	15.7	2.5	5.6	0.9
1000	1	0.25	146.0	15.3	47.7	5.0	109.8	11.5	36.0	3.8	73.6	7.7	24.3	2.5	59.2	6.2	19.6	2.1	44.7	4.7	15.0	1.6	30.2	3.2	10.3	1.1	15.7	1.6	5.6	0.6
750	0.75	0.188	146.0	11.5	47.7	3.7	109.8	8.6	36.0	2.8	73.6	5.8	24.3	1.9	59.2	4.6	19.6	1.5	44.7	3.5	15.0	1.2	30.2	2.4	10.3	0.8	15.7	1.2	5.6	0.4
600	0.6	0.15	146.0	9.2	47.7	3.0	109.8	6.9	36.0	2.3	73.6	4.6	24.3	1.5	59.2	3.7	19.6	1.2	44.7	2.8	15.0	0.9	30.2	1.9	10.3	0.6	15.7	1.0	5.6	0.4
500	0.5	0.125	146.0	7.6	47.7	2.5	109.8	5.7	36.0	1.9	73.6	3.9	24.3	1.3	59.2	3.1	19.6	1.0	44.7	2.3	15.0	0.8	30.2	1.6	10.3	0.5	15.7	0.8	5.6	0.3
300	0.3	0.075	146.0	4.6	47.7	1.5	109.8	3.4	36.0	1.1	73.6	2.3	24.3	0.8	59.2	1.9	19.6	0.6	44.7	1.4	15.0	0.5	30.2	0.9	10.3	0.3	15.7	0.5	5.6	0.1
100	0.1	0.025	146.0	1.5	47.7	0.5	109.8	1.1	36.0	0.4	73.6	0.8	24.3	0.3	59.2	0.6	19.6	0.2	44.7	0.5	15.0	0.1	30.2	0.3	10.3	0.1	15.7	0.2	5.6	0.1
50	0.05	0.013	146.0	0.8	47.7	0.2	109.8	0.6	36.0	0.2	73.6	0.4	24.3	0.1	59.2	0.3	19.6	0.1	44.7	0.2	15.0	0.1	30.2	0.1	10.3	0.1	15.7	0.1	5.6	0.1

Note: values are valid at an ambient temperature of 20 °C

site : www.1OBC.com
Email : Borhan772000@yahoo.com

بلبرینگ اسکوئی

(اسکو صنعت تاوریژ)

OBC
Oskoyi Ballbearing Company

Performance table
for worm gear screw jacks M/J

- Duty cycle 10-20%
- Duty cycle < 10%
- only static permissible

J3-Tr 80x10

n [rpm]	Stroke speed [m/min]		F=250 [kN]				F=200 [kN]				F=150 [kN]				F=100 [kN]				F=80 [kN]				F=60 [kN]				F=40 [kN]			
			10:1		40:1		10:1		40:1		10:1		40:1		10:1		40:1		10:1		40:1		10:1		40:1		10:1		40:1	
	H	L	Nm	kW	Nm	kW	Nm	kW	Nm	kW	Nm	kW	Nm	kW	Nm	kW	Nm	kW	Nm	kW	Nm	kW	Nm	kW	Nm	kW	Nm	kW	Nm	kW
1500	1.5	0.375	209.4	32.9	71.1	11.2	167.5	26.3	56.8	8.9	125.7	19.7	42.6	6.7	83.8	13.2	28.4	4.5	67	10.5	22.7	3.6	50.3	7.9	17.1	2.7	33.5	5.3	11.4	1.8
1000	1	0.25	209.4	21.9	71.1	7.4	167.5	17.5	56.8	6	125.7	13.2	42.6	4.5	83.8	8.8	28.4	3	67	7	22.7	2.4	50.3	5.3	17.1	1.8	33.5	3.5	11.4	1.2
750	0.75	0.188	209.4	16.4	71.1	5.6	167.5	13.2	56.8	4.5	125.7	9.9	42.6	3.3	83.8	6.6	28.4	2.2	67	5.3	22.7	1.8	50.3	3.9	17.1	1.3	33.5	2.6	11.4	0.9
600	0.6	0.15	209.4	13.2	71.1	4.5	167.5	10.5	56.8	3.6	125.7	7.9	42.6	2.7	83.8	5.3	28.4	1.8	67	4.2	22.7	1.4	50.3	3.2	17.1	1.1	33.5	2.1	11.4	0.7
500	0.5	0.125	209.4	11	71.1	3.7	167.5	8.8	56.8	3	125.7	6.6	42.6	2.2	83.8	4.4	28.4	1.5	67	3.5	22.7	1.2	50.3	2.6	17.1	0.9	33.5	1.8	11.4	0.6
300	0.3	0.075	209.4	6.6	71.1	2.2	167.5	5.3	56.8	1.8	125.7	3.9	42.6	1.3	83.8	2.6	28.4	0.9	67	2.1	22.7	0.7	50.3	1.6	17.1	0.5	33.5	1.1	11.4	0.4
100	0.1	0.025	209.4	2.2	71.1	0.7	167.5	1.8	56.8	0.6	125.7	1.3	42.6	0.4	83.8	0.9	28.4	0.3	67	0.7	22.7	0.2	50.3	0.5	17.1	0.2	33.5	0.4	11.4	0.1
50	0.05	0.013	209.4	1.1	71.1	0.4	167.5	0.9	56.8	0.3	125.7	0.7	42.6	0.2	83.8	0.4	28.4	0.1	67	0.4	22.7	0.1	50.3	0.3	17.1	0.1	33.5	0.2	11.4	0.1

J4-TR 100x10

n [rpm]	Stroke speed [m/min]		F=350 [kN]				F=300 [kN]				F=250 [kN]				F=200 [kN]				F=150 [kN]				F=100 [kN]				F=50 [kN]			
			10:1		40:1		10:1		40:1		10:1		40:1		10:1		40:1		10:1		40:1		10:1		40:1		10:1		40:1	
	H	L	Nm	kW	Nm	kW	Nm	kW	Nm	kW	Nm	kW	Nm	kW	Nm	kW	Nm	kW	Nm	kW	Nm	kW	Nm	kW	Nm	kW	Nm	kW	Nm	kW
1500	1.5	0.375	371.4	58.3	126.6	19.9	318.3	50	108.5	17	265.3	41.7	90.4	14.2	212.2	33.3	72.3	11.4	159.2	25	54.3	8.5	106.1	16.7	36.2	5.7	53.1	8.3	18.1	2.8
1000	1	0.25	371.4	38.9	126.6	13.3	318.3	33.3	108.5	11.4	265.3	27.8	90.4	9.5	212.2	22.2	72.3	7.6	159.2	16.7	54.3	5.7	106.1	11.1	36.2	3.8	53.1	5.6	18.1	1.9
750	0.75	0.188	371.4	29.2	126.6	9.9	318.3	25	108.5	8.5	265.3	20.8	90.4	7.1	212.2	16.7	72.3	5.7	159.2	12.5	54.3	4.3	106.1	8.3	36.2	2.8	53.1	4.2	18.1	1.4
600	0.6	0.15	371.4	23.3	126.6	8	318.3	20	108.5	6.8	265.3	16.7	90.4	5.7	212.2	13.3	72.3	4.5	159.2	10	54.3	3.4	106.1	6.7	36.2	2.3	53.1	3.3	18.1	1.1
500	0.5	0.125	371.4	19.4	126.6	6.6	318.3	16.7	108.5	5.7	265.3	13.9	90.4	4.7	212.2	11.1	72.3	3.8	159.2	8.3	54.3	2.8	106.1	5.6	36.2	1.9	53.1	2.8	18.1	0.9
300	0.3	0.075	371.4	11.7	126.6	4	318.3	10	108.5	3.4	265.3	8.3	90.4	2.8	212.2	6.7	72.3	2.3	159.2	5	54.3	1.7	106.1	3.3	36.2	1.1	53.1	1.7	18.1	0.6
100	0.1	0.025	371.4	3.9	126.6	1.3	318.3	3.3	108.5	1.1	265.3	2.8	90.4	0.9	212.2	2.2	72.3	0.8	159.2	1.7	54.3	0.6	106.1	1.1	36.2	0.4	53.1	0.6	18.1	0.2
50	0.05	0.013	371.4	1.9	126.6	0.7	318.3	1.7	108.5	0.6	265.3	1.4	90.4	0.5	212.2	1.1	72.3	0.4	159.2	0.8	54.3	0.3	106.1	0.6	36.2	0.2	53.1	0.3	18.1	0.1

J5-TR 120x14

n [rpm]	Stroke speed [m/min]		F=500 [kN]				F=400 [kN]				F=300 [kN]				F=200 [kN]				F=150 [kN]				F=100 [kN]				F=50 [kN]			
			14:1		56:1		14:1		56:1		14:1		56:1		14:1		56:1		14:1		56:1		14:1		56:1		14:1		56:1	
	H	L	Nm	kW	Nm	kW	Nm	kW	Nm	kW	Nm	kW	Nm	kW	Nm	kW	Nm	kW	Nm	kW	Nm	kW	Nm	kW	Nm	kW	Nm	kW	Nm	kW
1000	1	0.25	531	55.6	181	18.9	424	44.4	145	15.2	318	33.3	108	11.4	212	22.2	72	7.6	159	16.7	54	5.7	106	11.1	36	3.8	53	5.6	18	1.9
750	0.75	0.188	531	41.7	181	14.2	424	33.3	145	11.4	318	25	108	8.5	212	16.7	72	5.7	159	12.5	54	4.3	106	8.3	36	2.8	53	4.2	18	1.4
600	0.6	0.15	531	33.3	181	11.4	424	26.7	145	9.1	318	20	108	6.8	212	13.3	72	4.5	159	10	54	3.4	106	6.7	36	2.3	53	3.3	18	1.1
500	0.5	0.125	531	27.8	181	9.5	424	22.2	145	7.6	318	16.7	108	5.7	212	11.1	72	3.8	159	8.3	54	2.8	106	5.6	36	1.9	53	2.8	18	0.9
300	0.3	0.075	531	16.7	181	5.7	424	13.3	145	4.5	318	10	108	3.4	212	6.7	72	2.3	159	5	54	1.7	106	3.3	36	1.1	53	1.7	18	0.6
100	0.1	0.025	531	5.6	181	1.9	424	4.4	145	1.5	318	3.3	108	1.1	212	2.2	72	0.8	159	1.7	54	0.6	106	1.1	36	0.4	53	0.6	18	0.2
50	0.05	0.013	531	2.8	181	0.9	424	2.2	145	0.8	318	1.7	108	0.6	212	1.1	72	0.4	159	0.8	54	0.3	106	0.6	36	0.2	53	0.3	18	0.1

Note: values are valid at an ambient temperature of 20 °C

تلفن : (021) 33913364 - 33951660

فکس : (021) 33985603

Ordering code

Worm gear screw jacks

1	2	3	4	5	6	7	8	9	10	11	12	13

No.	Designation	Code	Discription
1	Size	M1, M2, ...	
		J1, J2, ...	
2	Design	N	Lifting spindle
		VP	Lifting spindle, protected against twisting by feather key
		VK	Lifting spindle, protected against twisting by square tube
		R	Rotating spindle
3	Transmission ratio	4:1 / 16:1	For M0, M1, M2
		6:1 / 24:1	For M3
		7:1 / 28:1	For M4
		9:1 / 36:1	For M5 and J1
		10:1 / 40:1	For J2, J3, J4
		14:1 / 56:1	For J5
4	Type of spindle	T	Trapezoidal screw drive
		K	Ball screw drive
5	Spindle dimension		e.g. 2005 = diameter 20 mm, pitch 5 mm
6	Stroke in [mm]		Specification of the stroke length
7	Attached part for version N/VK/VP		Spindle extension VL, Usable stroke length NL, e.g. due to block dimension bellows, mounting situation. See product drawings at page 57-60.
	Usable stroke length NL for version R		
8	Spindle end	M	Metric threaded stem
		A	End with chamfer
		S	Custom (according to specification, description or drawing)
		Z	Centric stem (standard for version R)
9	Attached part for version N/VK/VP	0	None
		BP	With fastening plate mounted
		GA	With spherical bearing mounted
		GK	With fork end mounted
		HG	With high-performance fork end mounted
	Nut type for version R	F-D	Flanged nut according to DIN 69051 (flange direction to housing)
		F-N	Flanged nut according to NEFF-Norm (flange direction to housing)
		D-F	Flanged nut according to DIN 69051 (flange direction to screw end)
		N-F	Flanged nut according to NEFF-Norm (flange direction to screw end)
10	Spindle cover	0	None
		FB	With bellows
		SF	With spiral spring cover
11	Anti-unscrewing device	0	None
		AS	With (installed as standard in KGT)
12	Shaft end	0	On both sides A+B (Standard)
		A	Shaft end on Side A
		B	Shaft end on side B
13	Special requirements	0	None
		1	According to specification, description or drawing